Brilliant
THE JEWEL IN LIGHTING

Kassandra
G34729...
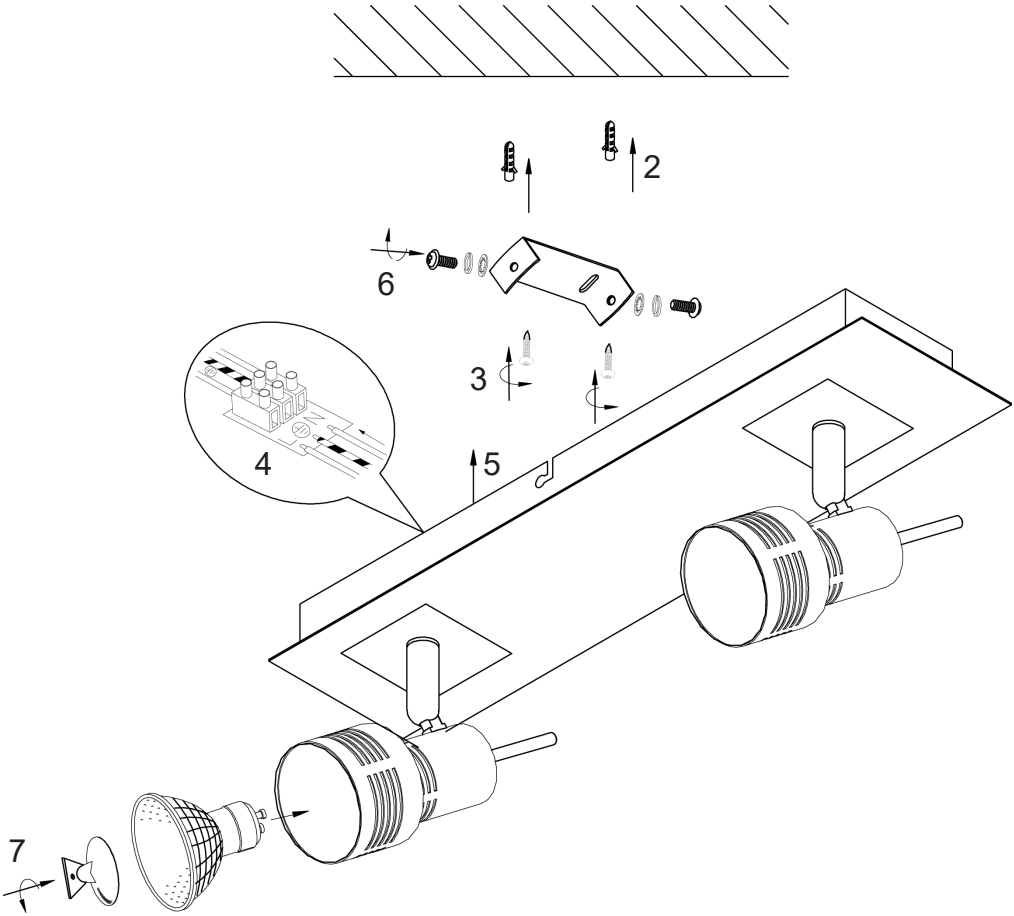
11.15