Brilliant
THE JEWEL IN LIGHTING

Kassandra
G34735...
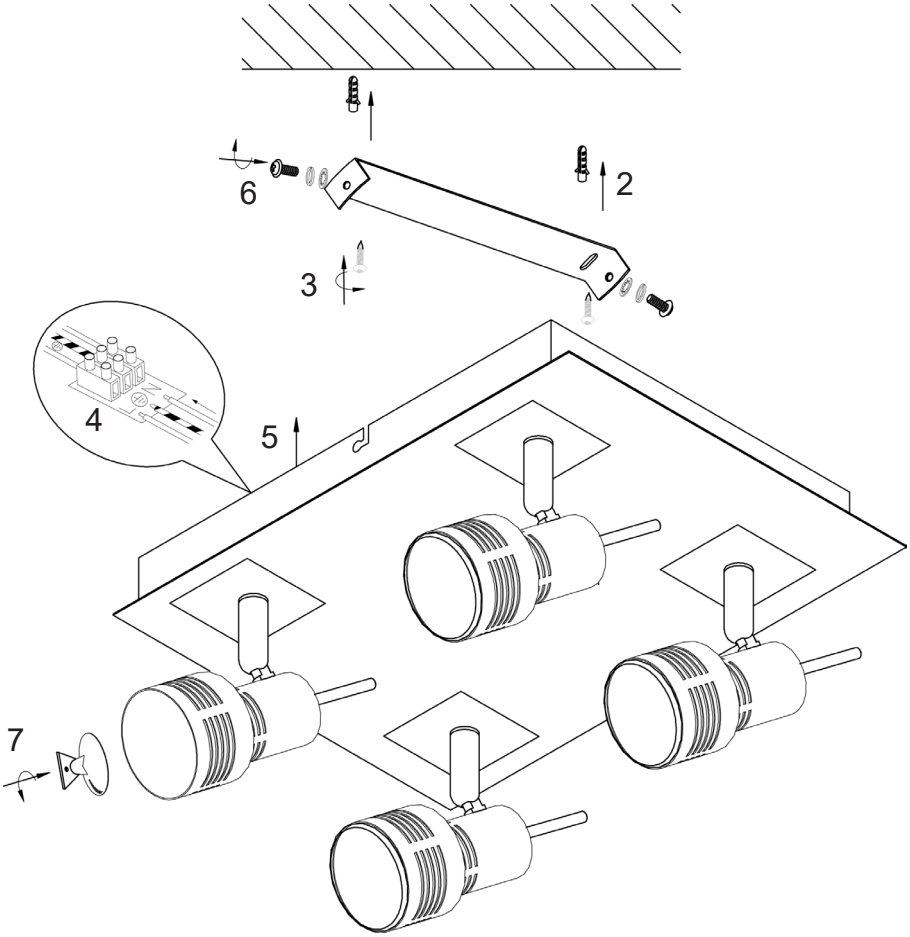
11.15