Brilliant
THE JEWEL IN LIGHTING

Bole
G46789...

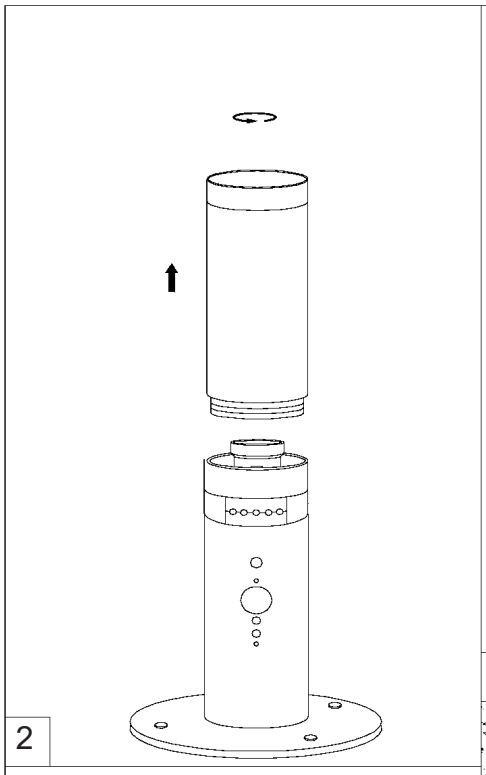

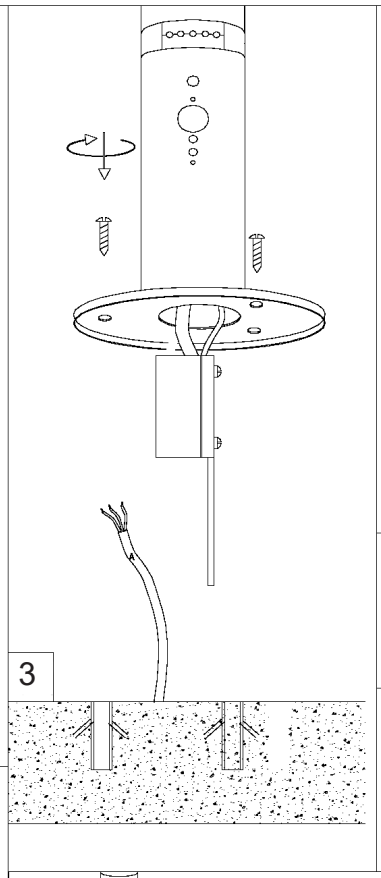

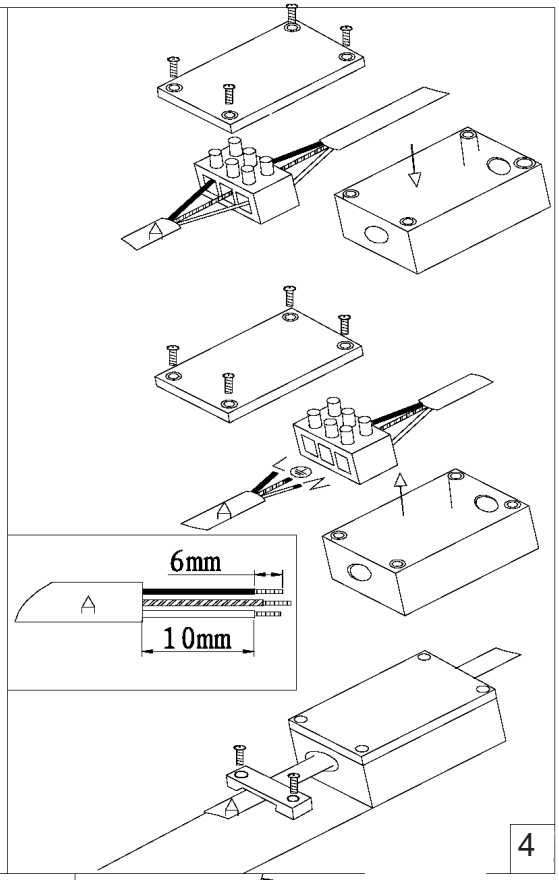

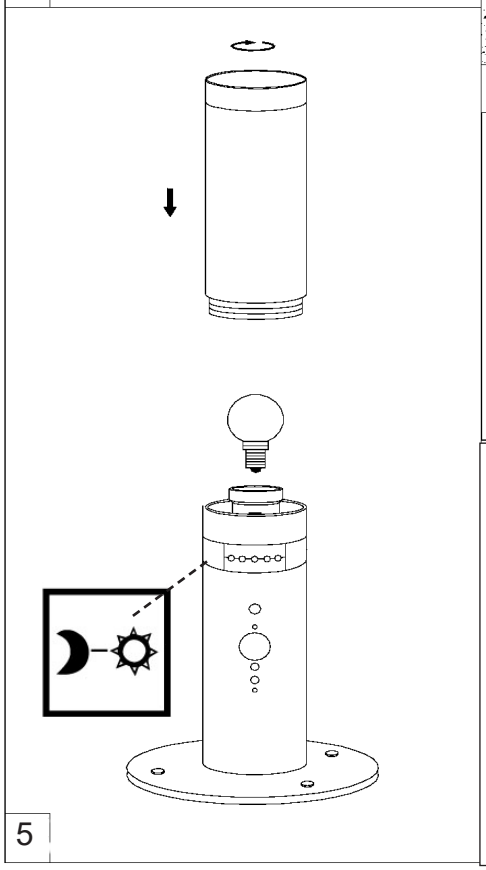

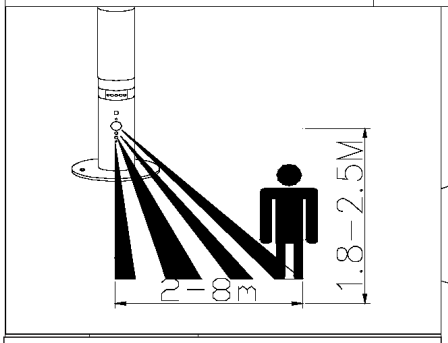

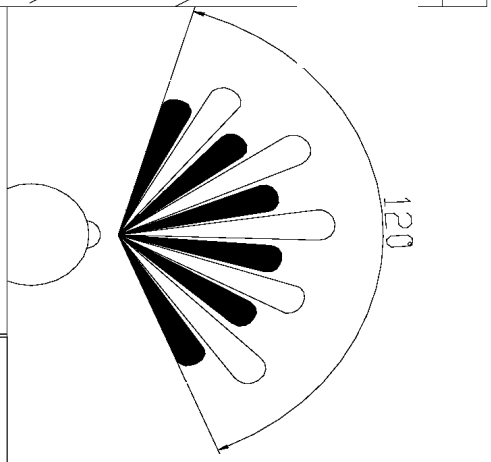

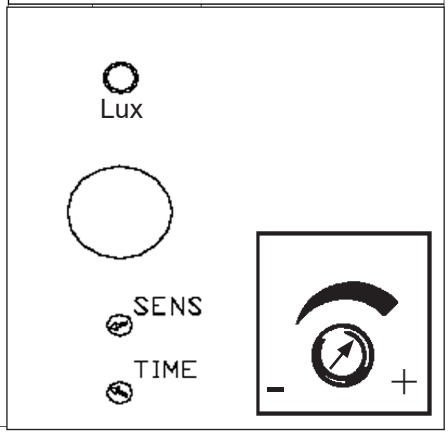

5 sec. - 5 min.