Brilliant
THE JEWEL IN LIGHTING

Bole
G46799...

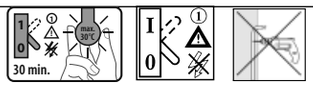
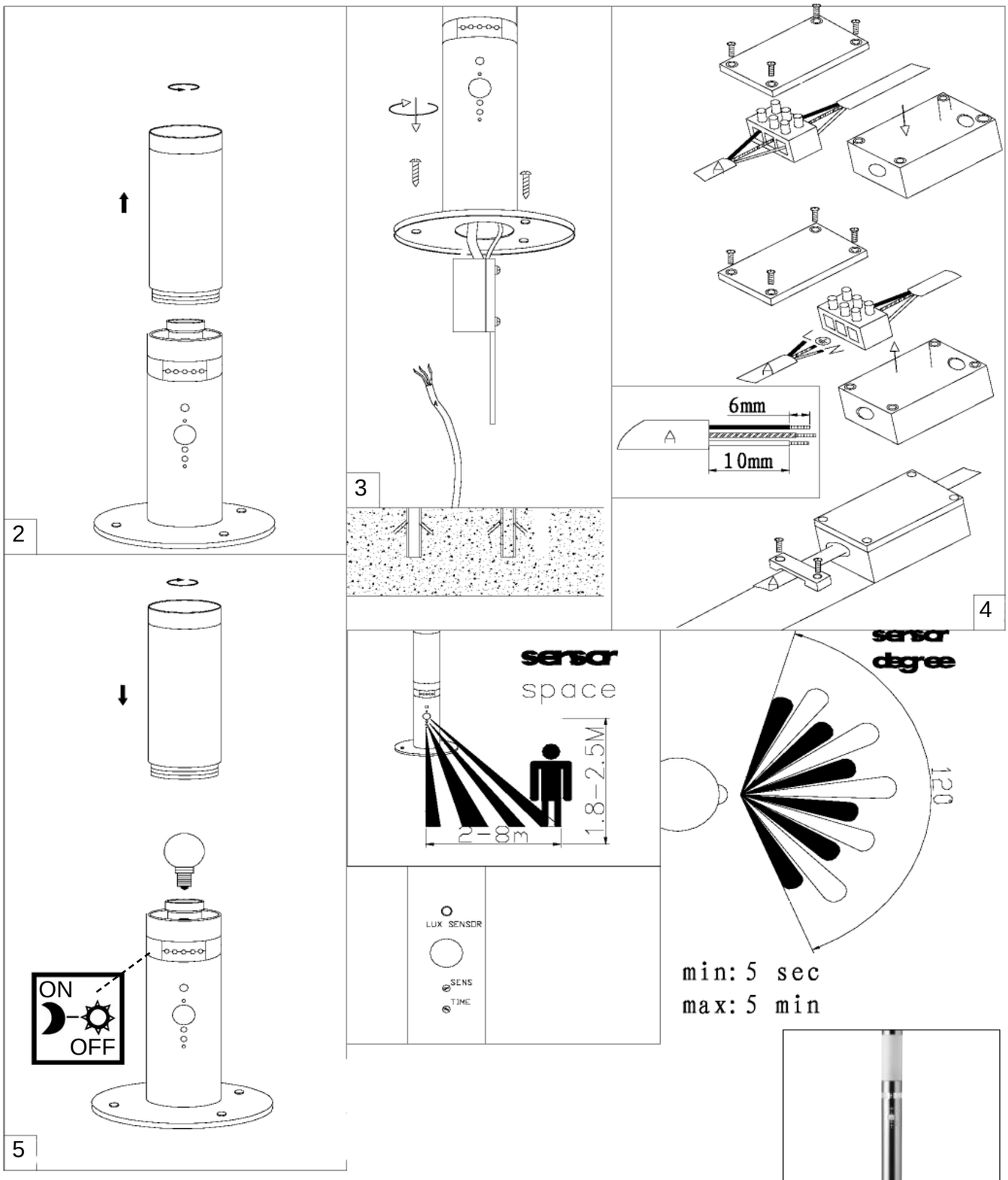
05.11