Brilliant
THE JEWEL IN LIGHTING

Ryan

07.14

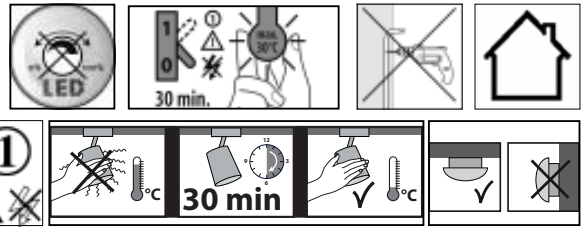

G57410...

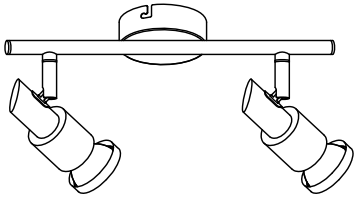

G57413...

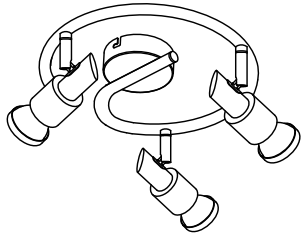

G57433...

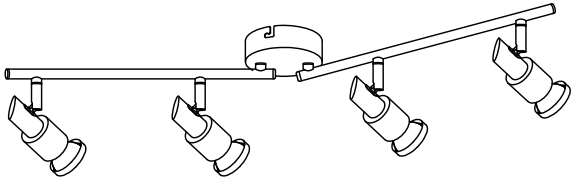

G57432...

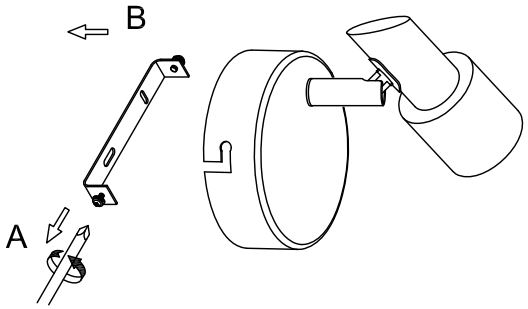

2

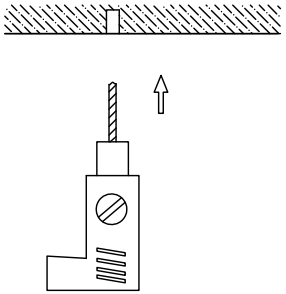

3

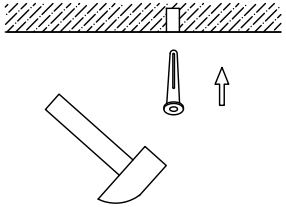

4

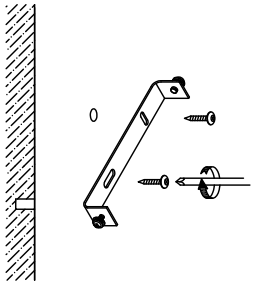

5

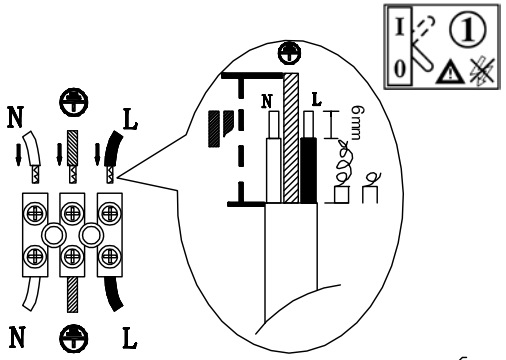

6

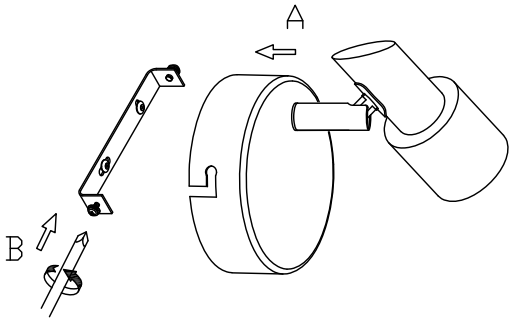

7

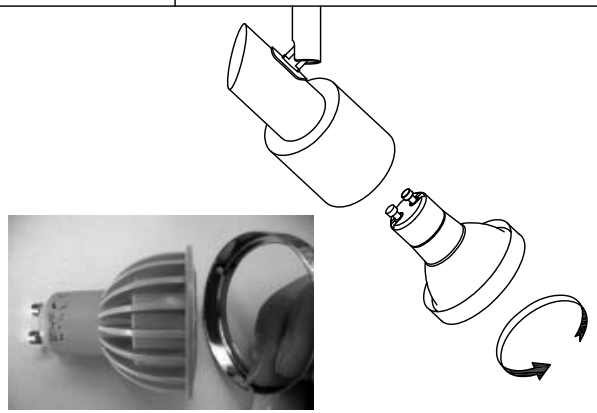

8