Brilliant
THE JEWEL IN LIGHTING

Cathleen
G94163...

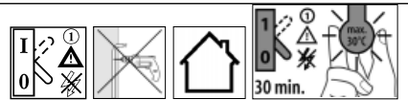

05.13

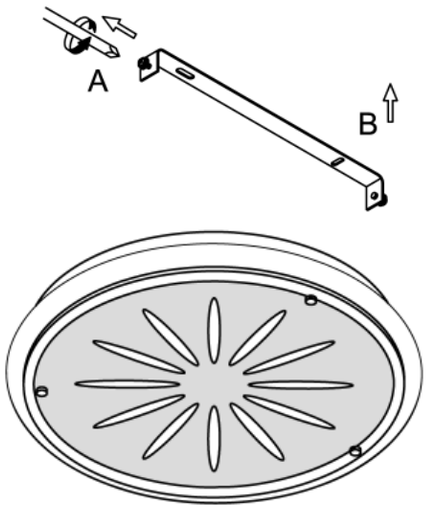

2

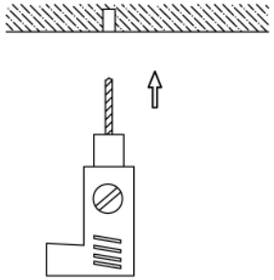

3

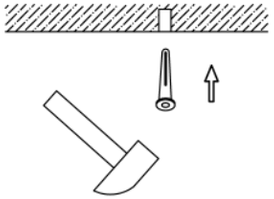

4

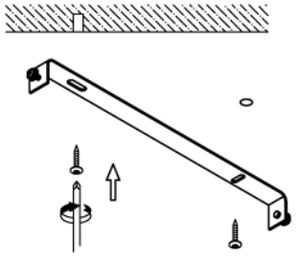

5

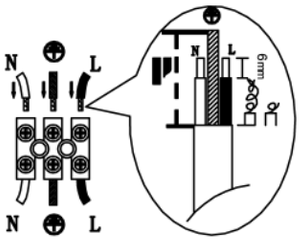

6

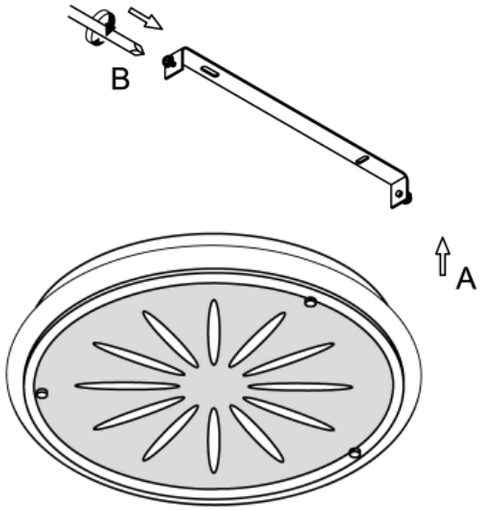

7