Brilliant
THE JEWEL IN LIGHTING

Bole
G96131...

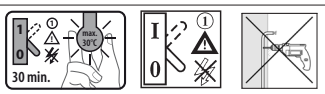

06.15

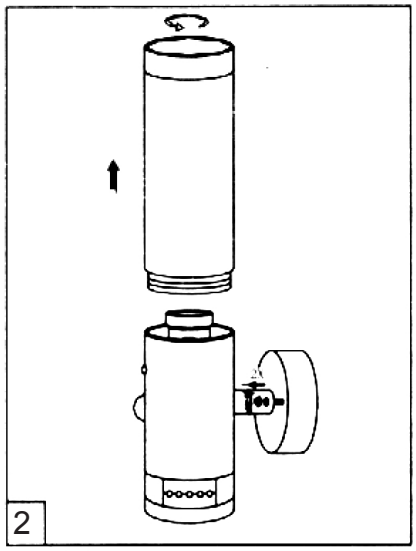

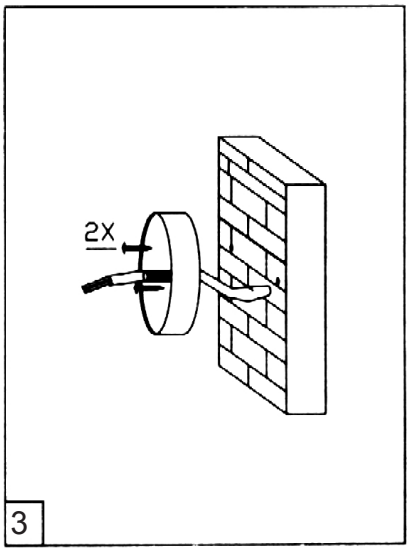

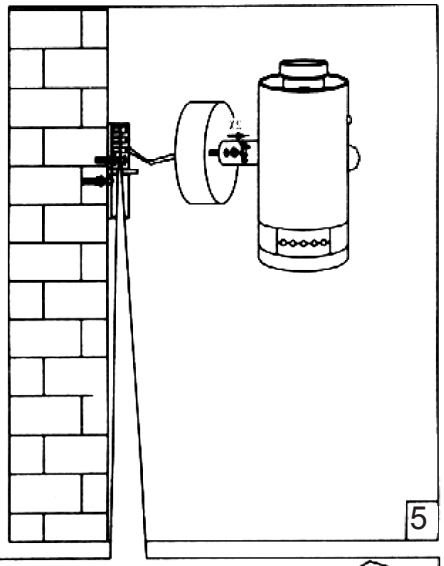

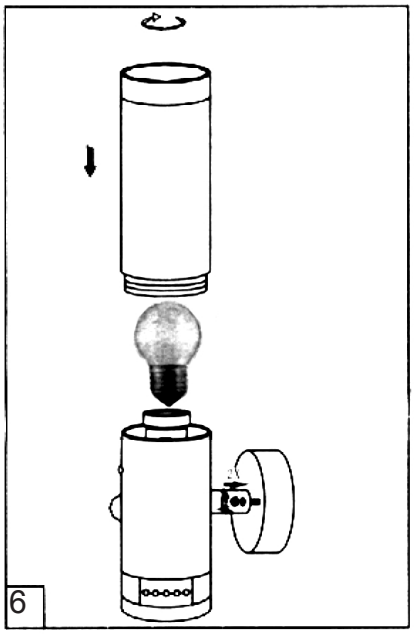

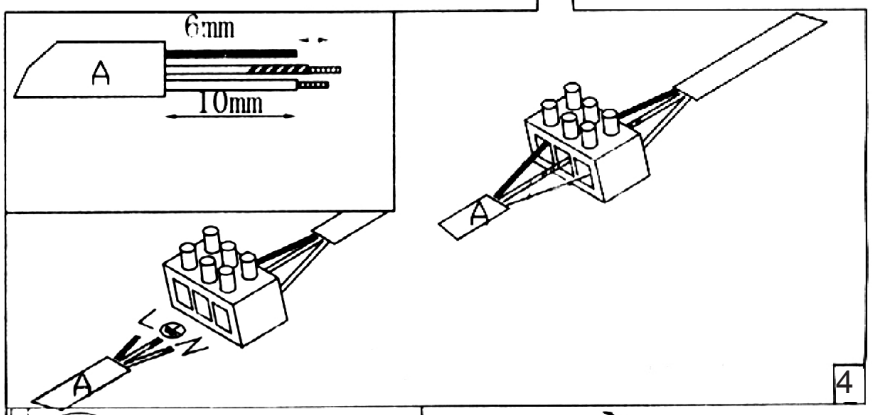

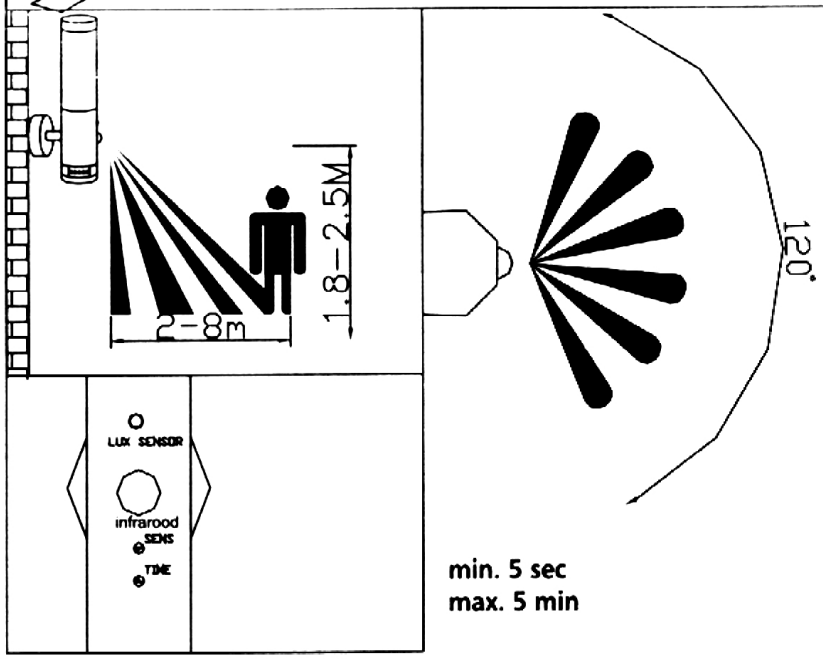

min. 5 sec
max. 5 min

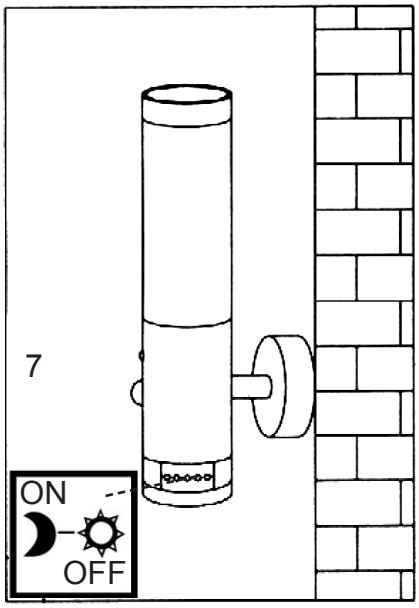

12LEDs 12xMAX.0.12W

IP44